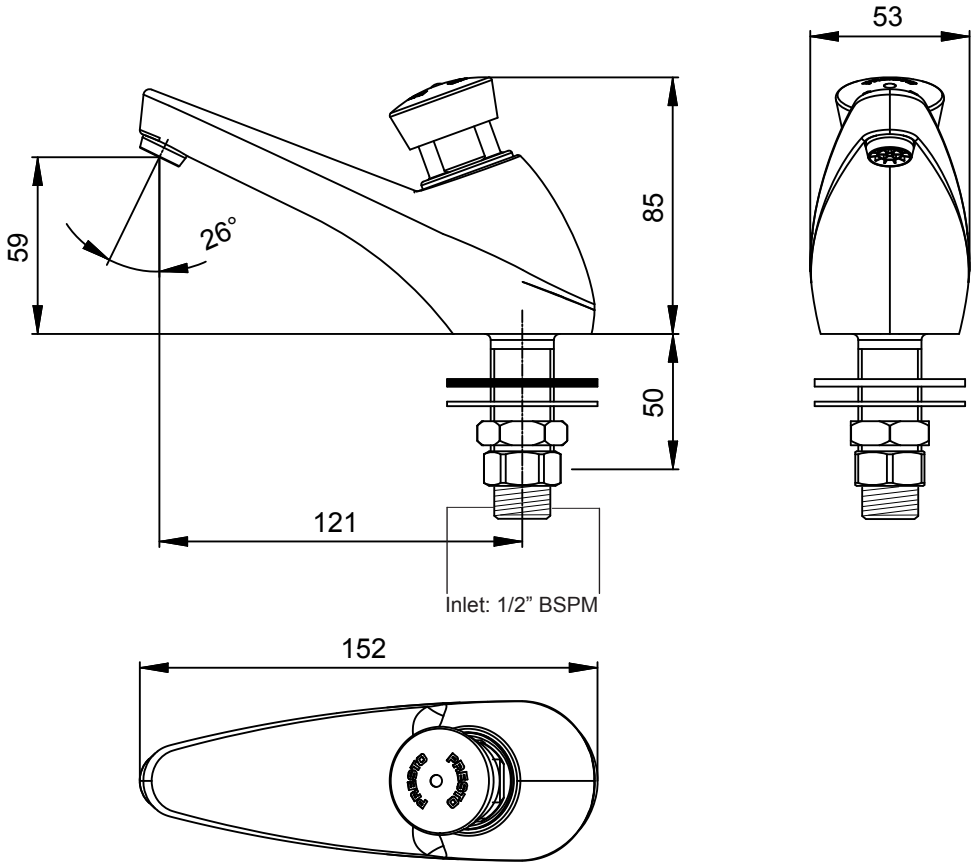

Presto 605Timed Flow Tap

www.thornthwaite.com.au